APPLICATION EDGE
VOLUME 1, ISSUE 12

TMEIC
We drive industry

IMPROVING POWER FACTOR WHILE SAVING ENERGY FOR LARGE PUMPING APPLICATIONS

Electricity use will grow for water and wastewater treatment (WWT) due to increasing population, new regulations, and possible upgrades. By far, pumping of all sorts is the largest consumer of energy in water supply systems and, to a small extent, in treatment systems. Variable frequency drives (VFDs) as applied to motor-driven pumps are a critical enabler to conserve energy. Using VFDs for energy savings has been extensively studied and well understood by WWT operators.

Another aspect of the power delivery apparatus for any water facility is to maintain good power quality. Power factor is one measure of power quality. Poor power factor leads to inefficient utilization of generators, transformers, and the distribution system by increasing the amount of current required to perform a given amount of work. Every utility has a variety of tariff structures commonly known as "rate schedules" that can impact a facility, usually dependent on the service voltage and the nature of the load. Water pumping and treatment facilities are typically considered an industrial load and hence subject to a very different tariff structure than the typical residential or commercial customer. Almost every industrial customer is subject to an energy charge element (cents/kWhr) and a demand charge element ($/kW). Poor power factor has a material impact on the demand charge that the plant might end up paying. Let's consider a rate structure in which the utility will adjust the billed demand (kW) by multiplying the actual demand (kW) by 0.95 and

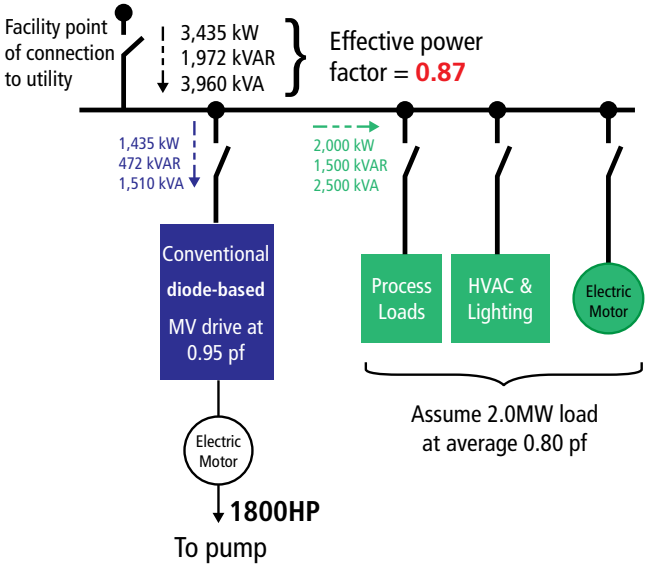

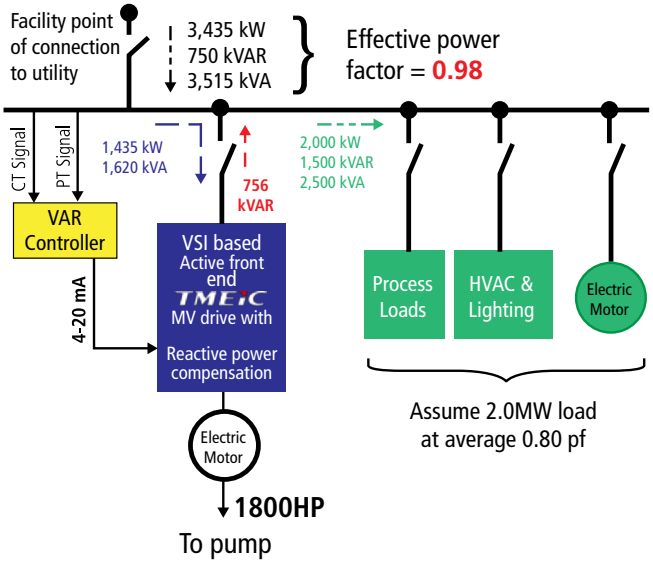

Utility Metering	Actual Demand (kW)	Power Factor	Billed Demand (kW)	Demand Charges ($)
Scenario 1: Conventional VFD system	3,435	0.87	3,751	22,506
Scenario 2: TMEIC Active front end VFD system	3,435	0.98	3,435	20,610 (8.4% lower)

Assumptions: Monthly electric tariff structure of: $6/kW demand charge + $0.04/kWhr energy charge, steady-state operation for 90% of the time (657 hours). Billed demand = actual demand (kW) times 0.95 and divided by the plant's unique power factor. Pre-determined pf limit for penalty avoidance = 0.95

divide by the plant's unique power factor. In layman's terms, the utility will penalize the plant for not maintaining a minimum of 0.95pf.

To demonstrate the impact of this rate structure on a hypothetical facility with an average operating load of 1000kW at 0.85 power factor, with a $6 per kW of demand charge, this particular facility will be billed for 1117kW (1000 x (0.95/0.85)), an 11.7% increase in demand charge due to the low power factor. Hence, to counter these charges, power factor correction capacitors are typically applied. While they provide the required benefit, it is essential to consider capacitor application considerations such as harmonic resonance, motor over-excitation, and voltage swells.

It is always of interest to identify an opportunity to save on capital costs and operational expenses while maintaining a high level of safety and reliability. TMEIC's Voltage source inverter (VSI) based active front end (AFE) VFDs provide a convenient solution. When applied correctly, they can provide energy savings through speed/flow control while providing dynamic reactive power (kVAR) to improve the power factor. This capability eliminates or materially reduces the need for power factor correction capacitors. Depending on the electricity tariff structure and the overall load profile, a facility could realize 1000's of dollars of savings a year by eliminating power factor penalties and ongoing maintenance costs related to capacitors. The above example of a hypothetical facility shows how a TMEIC VFD can improve power factor and reduce demand charge.

For specifications not mentioned here, contact TMEIC

WWW.TMEIC.COM

All specifications in this document are subject to change without notice.

I-5008-111 May 2021